BOYER BRANSDEN ELECTRONICS LTD

Frindsbury House, Cox Lane, Detling, MAIDSTONE, Kent ME14 3HE ENGLAND Telephone: 01622 730939 Fax: 01622 730930

MICRO-DIGITAL IGNITION SYSTEM FOR HONDA '4' S.O.H.C. MOTORCYCLES (KIT00089)

Comprising:-

a) Transistor Box (Red box with 6 wires)
b) Stator Plate (round printed circuit board with two coils type KH1a)
c) Magnetic Rotor (round plated steel unit with two magnets)
d) Plastic strap
e) 3M Connector

General fitting instructions

You will require the standard toolkit plus a 10mm socket spanner and strobe lamp.An impact screwdriver would be useful if the screws are very tight.

1) Open seat and remove tools.
2) Turn off petrol and remove petrol pipes, unhook rear petrol tank mountings and slide back, removing tank.
3) Disconnect the yellow and blue wires going to the ignition coils. See Fig.1
4) Fit the transistor box into a convenient place on the top frame tube behind the ignition coils or under the coils on the CB 500 (See Fig.1) using the plastic strap or P.V.C. tape.
5) Connect the blue and yellow wires from the transistor box, male connections to the blue and yellow wires from the ignition coils.
6) Connect the blue and yellow wires from the transistor box, female connections to the blue and yellow wires removed from the ignition coils.
7) Connect the black wire from the transistor box with a male connector to the spare black wire that comes out of the wiring loom just above the ignition coils. If no wire is provided (CB 400) connection must be made to the black/white wire feeding the ignition coils with the 3M connector provided.
8) Check all the connections are good and tight - if not, use pliers to pinch up the connectors.
9) Connect the black wire from the transistor box with the eyelet connector to the negative terminal of the battery.
10) Tuck all wires against the frame tubes to allow the tank to be refitted without pulling any of the connectors apart.
11) Refit the petrol tank and pipes.
12) Remove the contact breaker cover and, using the small pliers, undo the nuts holding the blue and yellow wires onto the contact breaker units.
13) Using the 10mm socket spanner, remove the centre bolt or nut holding the advance and retard unit in place.
14) Remove the three cross head screws holding the contact breaker backing plate and remove.
15) Remove the advance and retard unit from the end of the crankshaft.
16) Remove the cam bobweights and springs from the advance and retard unit.
17) Replace the centre of the advance and retard unit, leaving the large engine positioning nut off and the centre bolt loose.
18) Using the three crosshead screws, fit the stator plate into the position of the contact breaker plate, with the terminal screws at the bottom, setting it half way along its adjustment slots.
19) Connect the blue and yellow wires to the marked terminal screws on the stator plate.
20) Remove the advance and retard centre bolt and mount the magnetic rotor on the end of the unit with the magnets towards the stator plate, refit the centre bolt or nut, and hand tighten.
21) Using the kick-starter or back wheel, turn the engine until one of the `T' or Top Dead Centre marks aligns with the position on the engine casing.
22) Without turning the engine, rotate the magnetic rotor to the position shown in Fig.2 and fully tighten the centre bolt or nut.
23) Start the engine and run for five minutes to warm up the engine and ignition unit.
24) Connect the strobe lamp and time to the Full Advance Timing marks (See Fig.2) with the engine running at a steady 4500 RPM, by adjusting the stator plate on its slotted holes. If a strobe lamp is not available, the machine can be ridden with care to your nearest dealer for strobe timing.
25) With the timing finally set, a line can be marked from the left hand pole piece on the stator plate to the magnetic rotor, with the engine set at its Full Advance Timing position; this will give a re-timing position if the engine has to be dismantled.The dogs on the advancer will mark and lock into the magnetic rotor but if more cover clearance is required the rotor can be filed out to take them.(See gen.data No 5)
26) Refit the contact breaker cover, the ignition timing is set and requires no maintenance.

General Data

1) With this system all spark plugs spark at the same time, but only the cylinder under compression will fire.
2) Plug caps of 5000 ohm suppressed must be fitted.
3) If the battery voltage drops lower than 9 volts the electronics will stop working.
4) If coils of a type other than FL 703 are to be used then their current consumption must not exceed 2.8 amps each cold(4 ohms). 6 volt coils can be used in series, with the yellow and blue coil wires joined and feeding the first coil.
5)The dogs on the advancer shaft will mark the inside of the magnetic rotor. If more clearance is required to fit the cover, the rotor centre can be filed out to take these dogs, this will move the rotor in and also lock its position.Drill two small holes on the inside of the rotor on the marks and file them out square using a small needle file.
6) This system will turn off after 10 seconds if the engine is static,at which time one spark is produced.

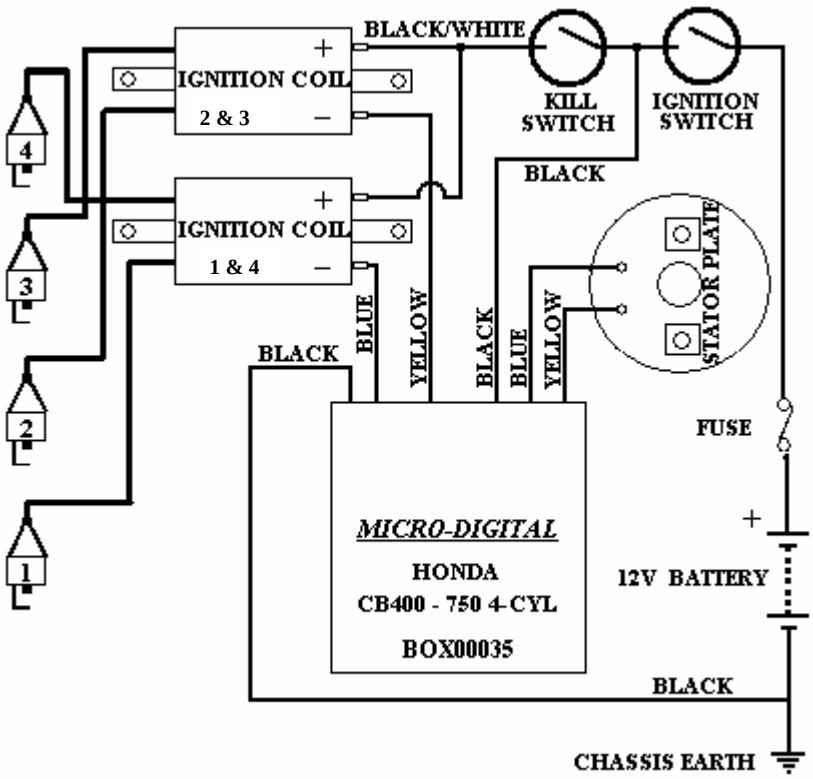

WARNING

ALWAYS TURN OFF BEFORE WORKING ON THIS SYSTEM AS VERY HIGH VOLTAGES CAN BE DANGEROUS.

Fig.1

WIRING LOOM

BLACK

BLACK

YELLOW

YELLOW

BLUE

BLUE

YELLOW

YELLOW

BLUE

BLUE

TO NEGATIVE OF BATTERY

LEFT HAND IGNITION COIL

TYPE FL 703 12v

TRANSISTOR BOX

Fig.2

ENGINE CASE

Engine set at top dead centre (T.D.C.) static.

Align the mark on the engine casing midway between these marks at 4500 RPM.

T F 1.4

2.3 T F

HEXAGON POLE PIECE

Static position of rotor at T.D.C,

MAGNET

MAGNETIC ROTOR